Powerful. Beautiful.

Excellence · Innovation

IPC57150
IPC58150
IPC59150

*front-screen button: the right side. widescreen button: the lower side

Shanghai Panelmate Electronics Co., Ltd.

15" XGA Industrial Arm-Mounted Operation Panel PC

PANELMATE
Creative HMI Solution

IPC57150 & IPC58150 & IPC59150

PANELMATE
Creative HMI Solution

Features

- Display type: 15", 15.6", 18.5", 19", 21.5"
- Front panel/back cover: Aluminium-magnesium alloy
- IP protection level: IP65
- Screen Type: Single point resistive touchscreen,Multi-point capacitive touchscreen,Non-touch screen
- OS: WinXP, Win7, Win10/Win11, WinCE, Linux
- Equipped with 2xIntel i210AT Gigabit network cards, 4xUSB
- Processor: Intel Celeron J6412 (don't support Win XP, Win7) /3855U/3865U and Intel skylake i3/i5/i7 multiple CPU options
- DC 9~36V
- Extendable WIFI/4G

Namely Rule

IPC5XXXX Y L X -xxxK-4G-128G-xxxx

- Industrial PC
- Series code
  - 50/57: Non-touch screen
  - 52/59: Capacitive screen
  - 51/58: Resistance screen
  - 50/51/52: Button located at the bottom side of screen
  - 57/58/59: Button loacted at the right side of screen
- Display size
- Y:optional round tube mounted(Retangular tube mounted)
- L:bottom support arm mounted(Support arm mounted)
- Angle of view (standard: 0°)
- CPU model
  - 64: Intel Celeron J6412
  - 38: Intel Celeron 3855U/3865U
  - 71: Intel Skylake i3 6100U/7100U
  - 72: Intel Skylake i5 6200U/7200U
  - 75: Intel Skylake i7 6500U/7500U
- Numbers of extension buttons(00K)
- Memory capacity
- HDD capacity
- Customized code (blank)

Specifications

Model		IPC57150&IPC58150&IPC59150				
Processor	CPU	Intel®Celeron® processor J6412	Intel®Celeron® processor 3855U/3865	Intel®Core™i3 processor	Intel®Core™i5 processor	Intel®Core™i7 processor
	Frequency	Quad Core 2.0GHZ	Dual Core 1.6GHZ	Dual Core 2.3GHZ	Dual Core 2.8GHZ	Dual Core 3.1GHZ
	Cache	1.5MB	2MB	3MB	3MB	4MB
	Memory	DDR4 3200MT/s Max: 32GB	DDR4-1866/2133 Max: 32GB	DDR4-2133 Max: 32GB	DDR4-2133 Max: 32GB	DDR4-2133 Max: 32GB
	Storage	1x2.5" SATA 3.0 +1 x mSATA				
I/O	Network (LAN)	2xIntel i210 1000Mbps RJ45 with surge protection				
	Audio	Realtek ALC662VD audio controller,support 5.1 channels				
	USB	4xUSB3.0				
	COM	2xRS232/RS485 with surge protection, RS485 support automatic flow control				
	Expansion Slot	1xMin-Pcle X1, Support 4G LTE/WIFI/BT with Sim card slot				
	Rear I/O	1xHDMI/2xGLAN/4xUSB/2xCOM/AUDIO/DC IN/Power Switch				
Power	Input Voltage	DC 9~36V				
	Power	36W				
Physical	Display Port	HDMI				
	Dimension (WxHxD)	(Keyboard bay not included) 432.4mm x 283.4mm x 130mm (17.02" x 11.16" x 5.12")				
	Net Weight(kg)	(Keyboard bay not included) 10kg				
	Mounted	4460 or 48 arm-mounted				
LCD	Display Type	15" XGA TFT				
	Resolution	1024x768				
	Colors	16.7M				
	Active Area (WxH/mm)	304.1mmx228.1mm (11.97"x8.98")				
	Backlight	LED				
	MTBF (hour)	50000hrs				
	Pixel Pitch (HxV)	0.297x0.297				
	Luminance(cd/m2)	420cd/m2				
	Contrast Ratio	800:1				
	Viewing Angle	(L) 80/ (R) 80/ (U) 80/ (D) 80				
Touchscreen	Touch Type	Single point resistive touchscreen & Multi-point capacitive touchscreen & Non-touch screen				
	Light Transmission	>85%				
	Controller	USB interface				
	Driver Support	Windows7, WSE7, Windows 10, Vxworks, Linux				
	Multi-touch	10 points				
	Surface Hardness	Resistive touchscreen: Mohs' Number>=3H; Capacitive touchscreen: Mohs' Number 7H				
Environment	Operating Temperature	-10~65℃				
	Storage Temperature	-20~70℃				
	Relative Humidity	5~95% (Non condensation)				
	Shock	Operating 10G peak acceleration(11 ms duration), follow IEC 60068-2-27				
	Vibration	Operating Random Vibration Test 5~500Hz, 1Grms@with HDD;2Grms@with SSD, follow IEC 60068-2-64				
	EMC	CE/FCC Class A				
	Front Panel Protection	IP65				

PANELMATE | 15" XGA Industrial Arm-Mounted Operation Panel PC

Technical Drawings unit: mm

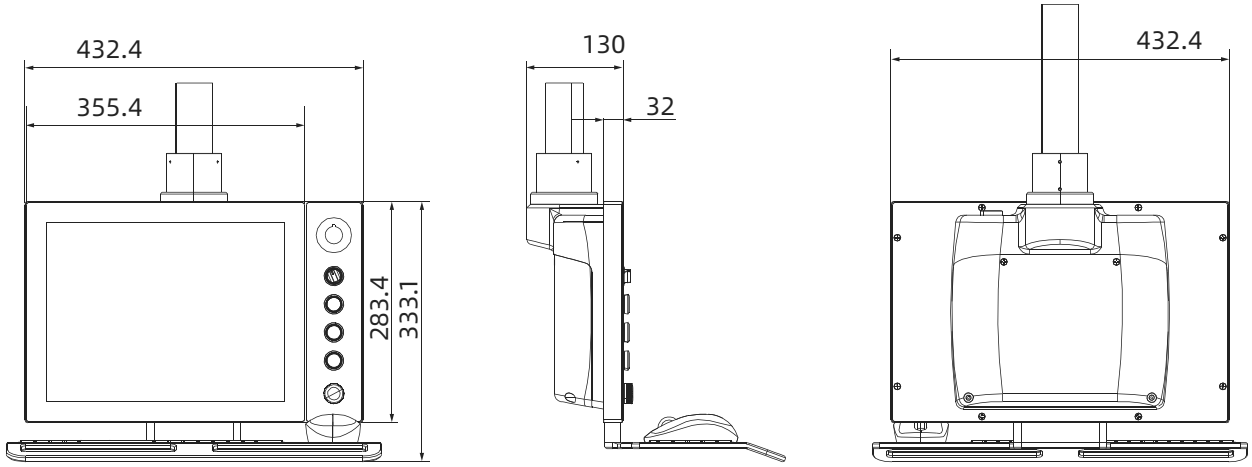

External I/O View

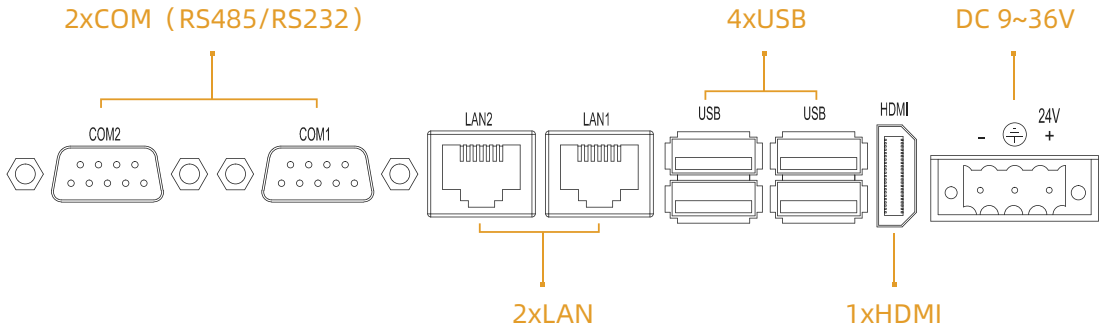

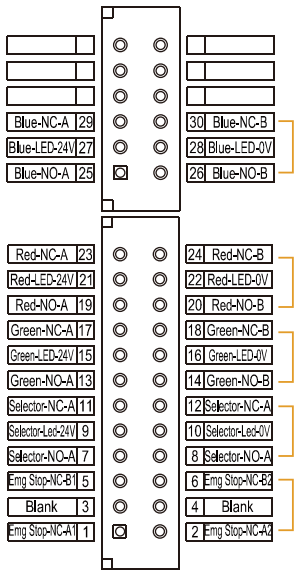

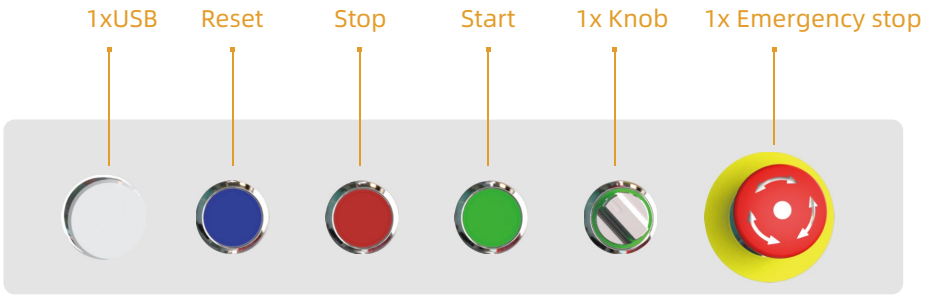

Note:The figure above shows the number of standard buttons
The number and brand of buttons can be customized

Ordering Information

Part Number	Description
IPC57150-6405K-4G-128G	15″ TFT LCD / Non-touch screen / extend 5 buttons / DC9~36V input / Resolution 1024x768/ J6412 / 4G RAM / 128G / mSATA / 2xLAN / 4xUSB / 1xHDMI
IPC58150-6405K-4G-128G	15″ TFT LCD / Capacitive touch screen / extend 5 buttons / DC9~36V input / Resolution 1024x768 / J6412 / 4G RAM / 128G / mSATA / 2xLAN / 4xUSB / 1xHDMI
IPC59150-6405K-4G-128G	15″ TFT LCD /Resistive touch screen / extend 5 buttons / DC9~36V input / Resolution 1024x768 / J6412 / 4G RAM / 128G / mSATA / 2xLAN / 4xUSB / 1xHDMI

Optional Accessories

mSATA	128G / 256G / 512G / 1T
2.5" HDD	512G / 1T / 2T
RAM	4G / 8G / 16G / 32G

Packing List

Terminal	3-pin terminal
Terminal	12-pin terminal
Terminal	24-pin terminal

Note: Package contents are subject to change without prior notice

Powerful. Beautiful.

Excellence · Innovation

IPC50156
IPC51156
IPC52156

*front-screen button: the right side. widescreen button: the lower side

Shanghai Panelmate Electronics Co., Ltd.

15.6" WXGA Industrial Arm-Mounted Operation Panel PC

PANELMATE
Creative HMI Solution

IPC50156 & IPC51156 & IPC52156

PANELMATE
Creative HMI Solution

Features

- Display type: 15", 15.6", 18.5", 19", 21.5"
- Front panel/back cover: Aluminium-magnesium alloy
- IP protection level: IP65
- Screen Type: Single point resistive touchscreen,Multi-point capacitive touchscreen,Non-touch screen
- OS: WinXP, Win7, Win10/Win11, WinCE, Linux
- Equipped with 2xIntel i210AT Gigabit network cards, 4xUSB
- Processor: Intel Celeron J6412 (don't support Win XP, Win7) /3855U/3865U and Intel skylake i3/i5/i7 multiple CPU options
- DC 9~36V
- Extendable WIFI/4G

Namely Rule

IPC5XXXX Y L X -xxxK-4G-128G-xxxx

- Industrial PC
- Series code
  - 50/57: Non-touch screen
  - 52/59: Capacitive screen
  - 51/58: Resistance screen
  - 50/51/52: Button located at the bottom side of screen
  - 57/58/59: Button loacted at the right side of screen
- Display size
- Y:optional round tube mounted(retangular tube mounted)
- L:bottom support arm mounted(Support arm mounted)
- Angle of view (standard: 0 °)
- CPU model
  - 64: Intel Celeron J6412
  - 38: Intel Celeron 3855U/3865U
  - 71: Intel Skylake i3 6100U/7100U
  - 72: Intel Skylake i5 6200U/7200U
  - 75: Intel Skylake i7 6500U/7500U
- Numbers of extension buttons(00K)
- Memory capacity
- HDD capacity
- Customized code (blank)

Specifications

Model		IPC50156&IPC51156&IPC52156				
Processor	CPU	Intel®Celeron® processor J6412	Intel®Celeron® processor 3855U/3865	Intel®Core™i3 processor	Intel®Core™ i5 processor	Intel®Core™ i7 processor
	Frequency	Quad Core 2.0GHZ	Dual Core 1.6GHZ	Dual Core 2.3GHZ	Dual Core 2.8GHZ	Dual Core 3.1GHZ
	Cache	1.5MB	2MB	3MB	3MB	4MB
	Memory	DDR4 3200MT/s Max: 32GB	DDR4-1866/2133 Max: 32GB	DDR4-2133 Max: 32GB	DDR4-2133 Max: 32GB	DDR4-2133 Max: 32GB
	Storage	1x2.5" SATA 3.0 +1 x mSATA				
I/O	Network (LAN)	2xIntel i210 1000Mbps RJ45 with surge protection				
	Audio	Realtek ALC662VD audio controller,support 5.1 channels				
	USB	4xUSB3.0/2.0				
	COM	2xRS232/RS485 with surge protection, RS485 support automatic flow control				
	Expansion Slot	1xMin-Pcle X1, Support 4G LTE/WIFI/BT with Sim card slot				
	Rear I/O	1xHDMI/2xGLAN/4xUSB/2xCOM/AUDIO/DC IN/Power Switch				
Power	Input Voltage	DC 9~36V				
	Power	43W				
Physical	Display Port	HDMI				
	Dimension (WxHxD)	(Keyboard bay not included) 405.6mm x 330.7mm x 130mm (15.97" x 13.02" x 5.12")				
	Net Weight(kg)	(Keyboard bay not included) 10.1kg				
	Mounted	4460 or 48 arm-mounted				
LCD	Display Type	15.6" WXGA TFT				
	Resolution	1366x768				
	Colors	16.7M				
	Active Area (WxH/mm)	344.23mmx193.54mm (13.55"x7.62")				
	Backlight	LED				
	MTBF (hour)	50000hrs				
	Pixel Pitch (HxV)	0.252x0.252				
	Luminance(cd/m2)	300cd/m2				
	Contrast Ratio	3000:1				
	Viewing Angle	(L) 85/ (R) 85/ (U) 85/ (D) 85				
Touchscreen	Touch Type	Single point resistive touchscreen & Multi-point capacitive touchscreen & Non-touch screen				
	Light Transmission	>85%				
	Controller	USB interface				
	Driver Support	Windows7, WSE7, Windows 10, Vxworks, Linux				
	Multi-touch	10 points				
	Surface Hardness	Resistive touchscreen: Mohs' Number> = 3H; Capacitive touchscreen: Mohs' Number 7H				
Environment	Operating Temperature	0~60℃				
	Storage Temperature	-20~60℃				
	Relative Humidity	5~95% (Non condensation)				
	Shock	Operating 10G peak acceleration(11 ms duration), follow IEC 60068-2-27				
	Vibration	Operating Random Vibration Test 5~500Hz, 1Grms@with HDD;2Grms@with SSD, follow IEC 60068-2-64				
	EMC	CE/FCC Class A				
	Front Panel Protection	IP65				

PANELMATE | 15.6" WXGA Industrial Arm-Mounted Operation Panel PC

Technical Drawings unit: mm

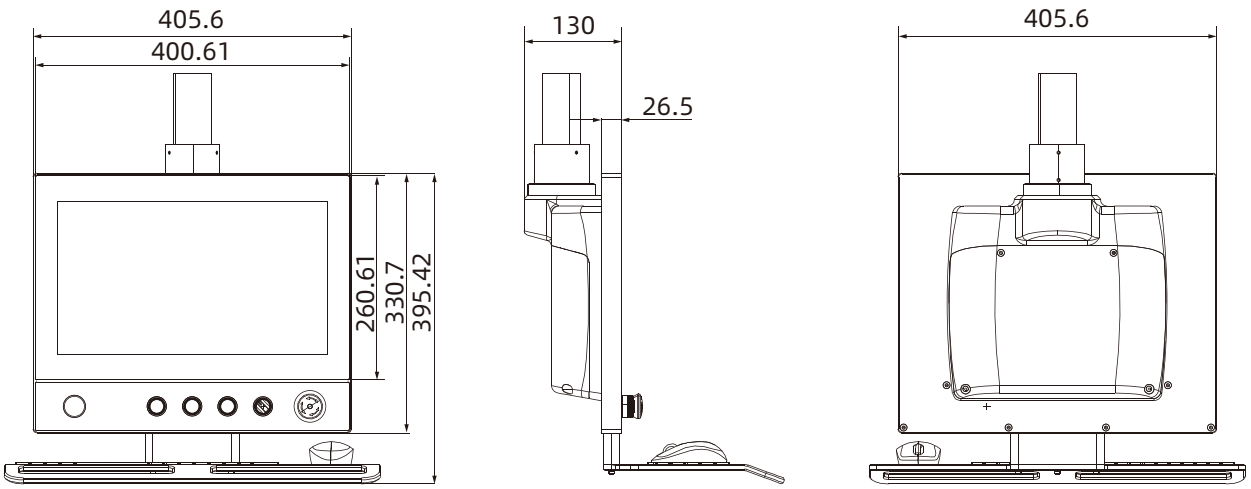

External I/O View

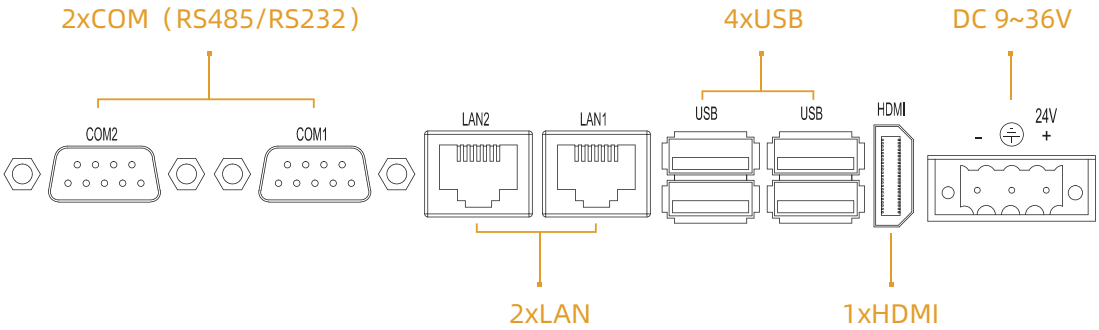

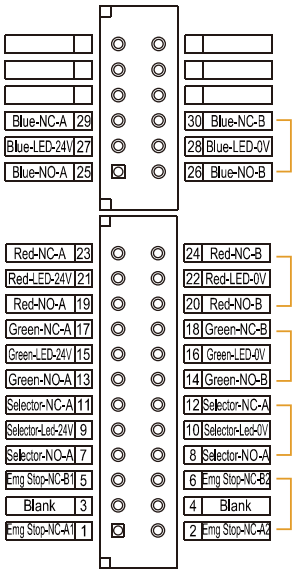

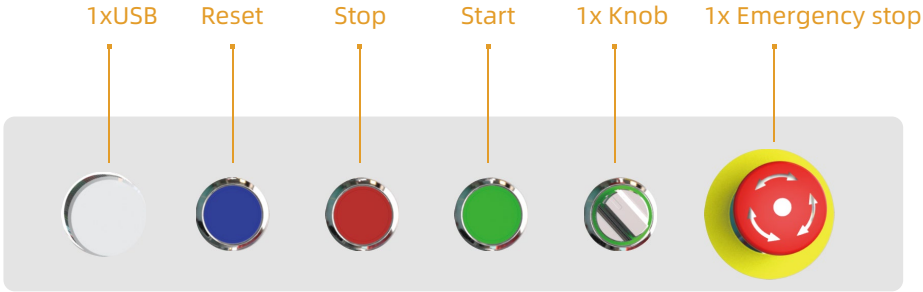

Note:The figure above shows the number of standard buttons
The number and brand of buttons can be customized

Ordering Information

Part Number	Description
IPC50156-6405K-4G-128G	15.6” TFT LCD / Non-touch screen / extend 5 buttons / DC9~36V input / Resolution 1366x768/ J6412 / 4G RAM / 128G / mSATA / 2xLAN / 4xUSB / 1xHDMI
IPC51156-6405K-4G-128G	15.6” TFT LCD / Capacitive touch screen / extend 5 buttons / DC9~36V input / Resolution 1366x768 / J6412 / 4G RAM / 128G / mSATA / 2xLAN / 4xUSB / 1xHDMI
IPC52156-6405K-4G-128G	15.6” TFT LCD / Resistive touch screen / extend 5 buttons / DC9~36V input / Resolution 1366x768 / J6412 / 4G RAM / 128G / mSATA / 2xLAN / 4xUSB / 1xHDMI

Optional Accessories

mSATA	128G / 256G / 512G / 1T
2.5" HDD	512G / 1T / 2T
RAM	4G / 8G / 16G / 32G

Packing List

Terminal	3-pin terminal
Terminal	12-pin terminal
Terminal	24-pin terminal

Note: Package contents are subject to change without prior notice

Powerful. Beautiful.

Excellence · Innovation

IPC50185
IPC51185
IPC52185

*front-screen button: the right side. widescreen button: the lower side

Shanghai Panelmate Electronics Co., Ltd.

18.5" WXGA Industrial Arm-Mounted Operation Panel PC

PANELMATE
Creative HMI Solution

IPC50185 & IPC51185 & IPC52185

PANELMATE
Creative HMI Solution

Features

- Display type: 15", 15.6", 18.5", 19", 21.5"
- Front panel/back cover: Aluminium-magnesium alloy
- IP protection level: IP65
- Screen Type: Single point resistive touchscreen,Multi-point capacitive touchscreen,Non-touch screen
- OS: WinXP, Win7, Win10/Win11, WinCE, Linux
- Equipped with 2xIntel i210AT Gigabit network cards, 4xUSB
- Processor: Intel Celeron J6412 (don't support Win XP, Win7) /3855U/3865U and Intel skylake i3/i5/i7 multiple CPU options
- DC 9~36V
- Extendable WIFI/4G

Namely Rule

IPC5XXXX Y L X -xxxK-4G-128G-xxxx

- Industrial PC
- Series code
  - 50/57: Non-touch screen
  - 52/59: Capacitive screen
  - 51/58: Resistance screen
  - 50/51/52: Button located at the bottom side of screen
  - 57/58/59: Button loacted at the right side of screen
- Display size
- Y:optional round tube mounted(retangular tube mounted)
- L:bottom support arm mounted(Support arm mounted)
- Angle of view (standard: 0 °)
- CPU model
  - 64: Intel Celeron J6412
  - 38: Intel Celeron 3855U/3865U
  - 71: Intel Skylake i3 6100U/7100U
  - 72: Intel Skylake i5 6200U/7200U
  - 75: Intel Skylake i7 6500U/7500U
- Numbers of extension buttons(00K)
- Memory capacity
- HDD capacity
- Customized code (blank)

Specifications

Model		IPC50185&IPC51185&IPC52185				
Processor	CPU	Intel®Celeron® processor J6412	Intel®Celeron® processor 3855U/3865	Intel®Core™i3 processor	Intel®Core™i5 processor	Intel®Core™i7 processor
	Frequency	Quad Core 2.0GHZ	Dual Core 1.6GHZ	Dual Core 2.3GHZ	Dual Core 2.8GHZ	Dual Core 3.1GHZ
	Cache	1.5MB	2MB	3MB	3MB	4MB
	Memory	DDR4 3200MT/s Max: 32GB	DDR4-1866/2133 Max: 32GB	DDR4-2133 Max: 32GB	DDR4-2133 Max: 32GB	DDR4-2133 Max: 32GB
	Storage	1x2.5" SATA 3.0 +1 x mSATA				
I/O	Network (LAN)	2xIntel i210 1000Mbps RJ45 with surge protection				
	Audio	Realtek ALC662VD audio controller,support 5.1 channels				
	USB	4xUSB3.0/2.0				
	COM	2xRS232/RS485 with surge protection, RS485 support automatic flow control				
	Expansion Slot	1xMin-Pcle X1, Support 4G LTE/WIFI/BT with Sim card slot				
	Rear I/O	1xHDMI/2xGLAN/4xUSB/2xCOM/AUDIO/DC IN/Power Switch				
Power	Input Voltage	DC 9~36V				
	Power	41W				
Physical	Display Port	HDMI				
	Dimension (WxHxD)	(Keyboard bay not included) 465.4mm x 355.3mm x 130mm (18.32" x 13.99" x 5.12")				
	Net Weight(kg)	(Keyboard bay not included) 12.5kg				
	Mounted	4460 or 48 arm-mounted				
LCD	Display Type	18.5" WXGA TFT				
	Resolution	1366x768				
	Colors	16.7M				
	Active Area (WxH/mm)	409.8mmx230.4mm (16.13"x9.07")				
	Backlight	LED				
	MTBF (hour)	30000hrs				
	Pixel Pitch (HxV)	0.3x0.3				
	Luminance(cd/m2)	500cd/m2				
	Contrast Ratio	1000:1				
	Viewing Angle	(L) 89/ (R) 89/ (U) 89/ (D) 89				
Touchscreen	Touch Type	Single point resistive touchscreen & Multi-point capacitive touchscreen & Non-touch screen				
	Light Transmission	>85%				
	Controller	USB interface				
	Driver Support	Windows7, WSE7, Windows 10, Vxworks, Linux				
	Multi-touch	10 points				
	Surface Hardness	Resistive touchscreen: Mohs' Number> = 3H; Capacitive touchscreen: Mohs' Number 7H				
Environment	Operating Temperature	0~50℃				
	Storage Temperature	-20~60℃				
	Relative Humidity	5~95% (Non condensation)				
	Shock	Operating 10G peak acceleration(11 ms duration), follow IEC 60068-2-27				
	Vibration	Operating Random Vibration Test 5~500Hz, 1Grms@with HDD;2Grms@with SSD, follow IEC 60068-2-64				
	EMC	CE/FCC Class A				
	Front Panel Protection	IP65				

PANELMATE | 18.5" WXGA Industrial Arm-Mounted Operation Panel PC

IPC50185 & IPC51185 & IPC52185

Technical Drawings unit: mm

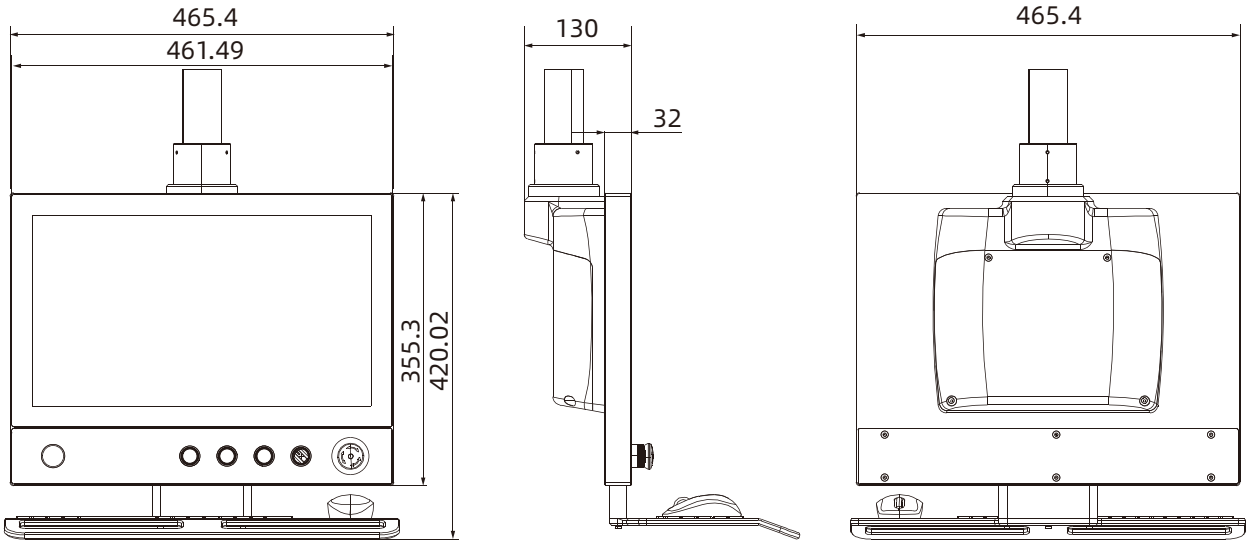

External I/O View

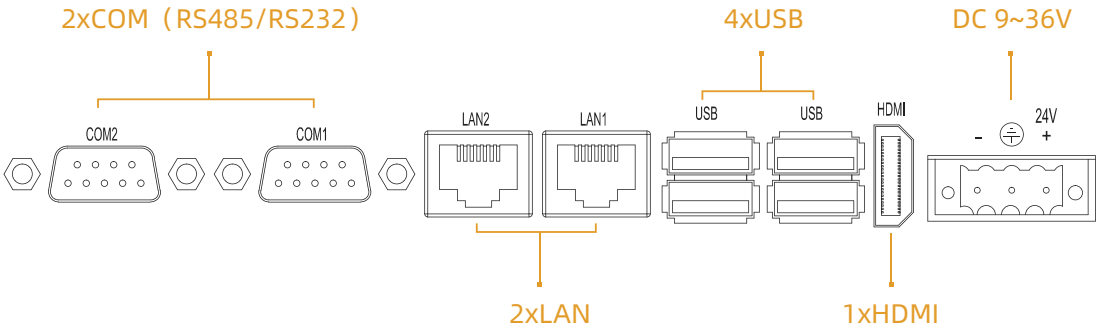

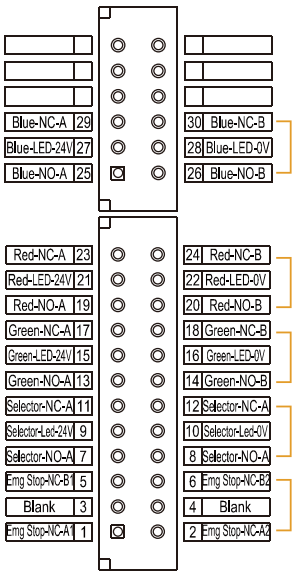

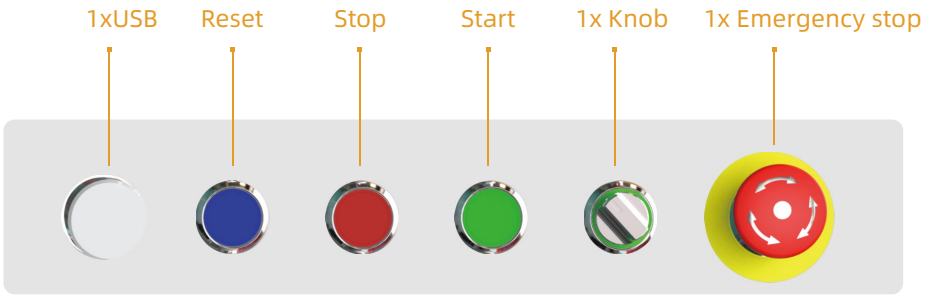

Note:The figure above shows the number of standard buttons
The number and brand of buttons can be customized

Ordering Information

Part Number	Description
IPC50185-6405K-4G-128G	18.5″ TFT LCD / Non-touch screen / extend 5 buttons / DC9~36V input / Resolution 1366x768/ J6412 / 4G RAM / 128G / mSATA / 2xLAN / 4xUSB / 1xHDMI
IPC51185-6405K-4G-128G	18.5″ TFT LCD / Capacitive touch screen / extend 5 buttons / DC9~36V input / Resolution1366x768 / J6412 / 4G RAM / 128G / mSATA / 2xLAN / 4xUSB / 1xHDMI
IPC52185-6405K-4G-128G	18.5″ TFT LCD / Resistive touch screen / extend 5 buttons / DC9~36V input / Resolution 1366x768 / J6412 / 4G RAM / 128G / mSATA / 2xLAN / 4xUSB / 1xHDMI

Optional Accessories

mSATA	128G / 256G / 512G / 1T
2.5" HDD	512G / 1T / 2T
RAM	4G / 8G / 16G / 32G

Packing List

Terminal	3-pin terminal
Terminal	12-pin terminal
Terminal	24-pin terminal

Note: Package contents are subject to change without prior notice

Powerful. Beautiful.

Excellence · Innovation

IPC57190
IPC58190
IPC59190

*front-screen button: the right side. widescreen button: the lower side

Shanghai Panelmate Electronics Co., Ltd.

19" SXGA Industrial Arm-Mounted Operation Panel PC

PANELMATE
Creative HMI Solution

IPC57190 & IPC58190 & IPC59190

PANELMATE
Creative HMI Solution

Features

- Display type: 15", 15.6", 18.5", 19", 21.5"
- Front panel/back cover: Aluminium-magnesium alloy
- IP protection level: IP65
- Screen Type: Single point resistive touchscreen,Multi-point capacitive touchscreen,Non-touch screen
- OS: WinXP, Win7, Win10/Win11, WinCE, Linux
- Equipped with 2xIntel i210AT Gigabit network cards, 4xUSB
- Processor: Intel Celeron J6412 (don't support Win XP, Win7) /3855U/3865U and Intel skylake i3/i5/i7 multiple CPU options
- DC 9~36V
- Extendable WIFI/4G

Namely Rule

IPC5XXXX Y L X -xxxK-4G-128G-xxxx

- Industrial PC
- Series code
  - 50/57: Non-touch screen
  - 52/59: Capacitive screen
  - 51/58: Resistance screen
  - 50/51/52: Button located at the bottom side of screen
  - 57/58/59: Button loacted at the right side of screen
- Display size
- Y:optional round tube mounted(retangular tube mounted)
- L:bottom support arm mounted(Support arm mounted)
- Angle of view (standard: 0 °)
- Customized code (blank)
- HDD capacity
- Memory capacity
- Numbers of extension buttons(00K)
- CPU model
  - 64: Intel Celeron J6412
  - 38: Intel Celeron 3855U/3865U
  - 71: Intel Skylake i3 6100U/7100U
  - 72: Intel Skylake i5 6200U/7200U
  - 75: Intel Skylake i7 6500U/7500U

Specifications

Model		IPC57190&IPC58190&IPC59190				
Processor	CPU	Intel®Celeron® processor J6412	Intel®Celeron® processor 3855U/3865	Intel®Core™i3 processor	Intel®Core™i5 processor	Intel®Core™i7 processor
	Frequency	Quad Core 2.0GHZ	Dual Core 1.6GHZ	Dual Core 2.3GHZ	Dual Core 2.8GHZ	Dual Core 3.1GHZ
	Cache	1.5MB	2MB	3MB	3MB	4MB
	Memory	DDR4 3200MT/s Max: 32GB	DDR4-1866/2133 Max: 32GB	DDR4-2133 Max: 32GB	DDR4-2133 Max: 32GB	DDR4-2133 Max: 32GB
	Storage	1x2.5" SATA 3.0 +1 x mSATA				
I/O	Network (LAN)	2xIntel i210 1000Mbps RJ45 with surge protection				
	Audio	Realtek ALC662VD audio controller,support 5.1 channels				
	USB	4xUSB3.0				
	COM	2xRS232/RS485 with surge protection, RS485 support automatic flow control				
	Expansion Slot	1xMin-Pcle X1, Support 4G LTE/WIFI/BT with Sim card slot				
	Rear I/O	1xHDMI/2xGLAN/4xUSB/2xCOM/AUDIO/DC IN/Power Switch				
Power	Input Voltage	DC 9~36V				
	Power	39W				
Physical	Display Port	HDMI				
	Dimension (WxHxD)	(Keyboard bay not included) 512.7mm x 351.6mm x 130mm (20.19" x 13.84" x 5.12")				
	Net Weight(kg)	(Keyboard bay not included) 13.3kg				
	Mounted	4460 or 48 arm-mounted				
LCD	Display Type	19" SXGA TFT				
	Resolution	1280x1024				
	Colors	16.7M				
	Active Area (WxH/mm)	376.32mmx301.06mm (14.82"x11.85")				
	Backlight	LED				
	MTBF (hour)	30000hrs				
	Pixel Pitch (HxV)	0.294x0.294				
	Luminance(cd/m2)	250cd/m2				
	Contrast Ratio	1000:1				
	Viewing Angle	(L) 85/ (R) 85/ (U) 80/ (D) 80				
Touchscreen	Touch Type	Single point resistive touchscreen & Multi-point capacitive touchscreen & Non-touch screen				
	Light Transmission	>85%				
	Controller	USB interface				
	Driver Support	Windows7, WSE7, Windows 10, Vxworks, Linux				
	Multi-touch	10 points				
	Surface Hardness	Resistive touchscreen: Mohs' Number> = 3H; Capacitive touchscreen: Mohs' Number 7H				
Environment	Operating Temperature	0~50℃				
	Storage Temperature	-20~60℃				
	Relative Humidity	5~95% (Non condensation)				
	Shock	Operating 10G peak acceleration(11 ms duration), follow IEC 60068-2-27				
	Vibration	Operating Random Vibration Test 5~500Hz, 1Grms@with HDD;2Grms@with SSD, follow IEC 60068-2-64				
	EMC	CE/FCC Class A				
	Front Panel Protection	IP65				

All product specifications are subject to change without notice.

Last updated:July-2023

Technical Drawings unit: mm

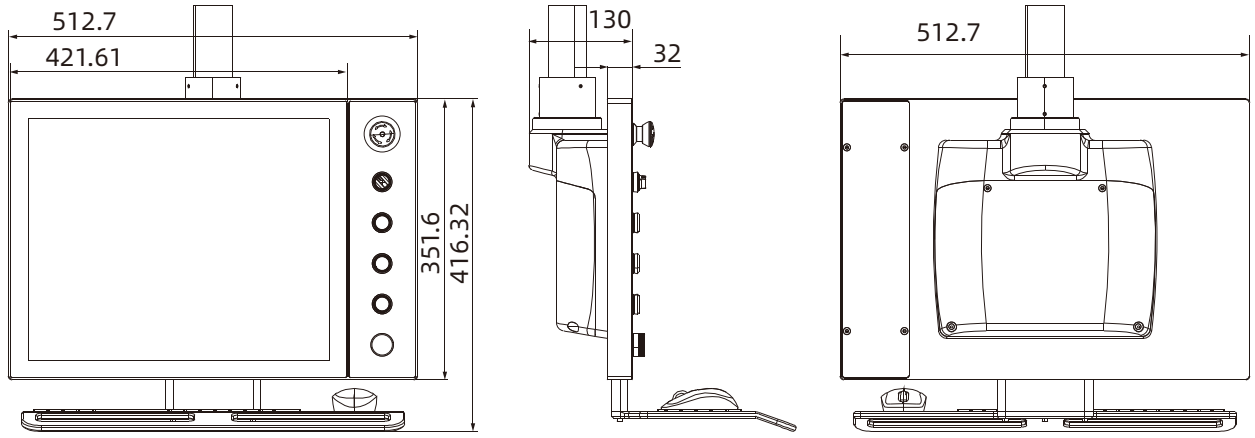

External I/O View

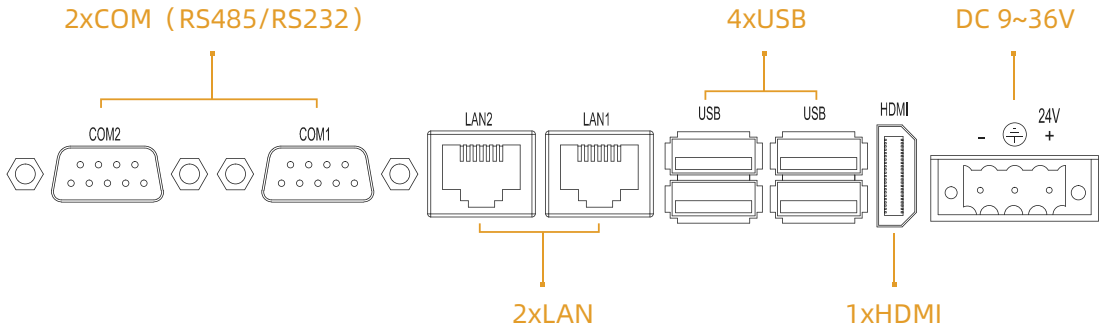

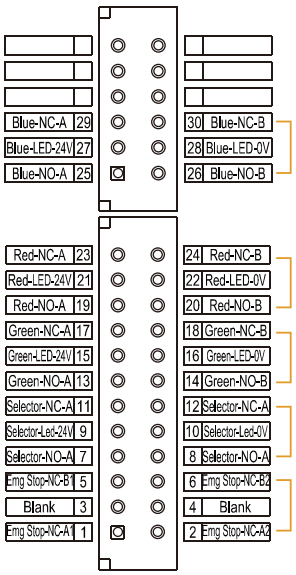

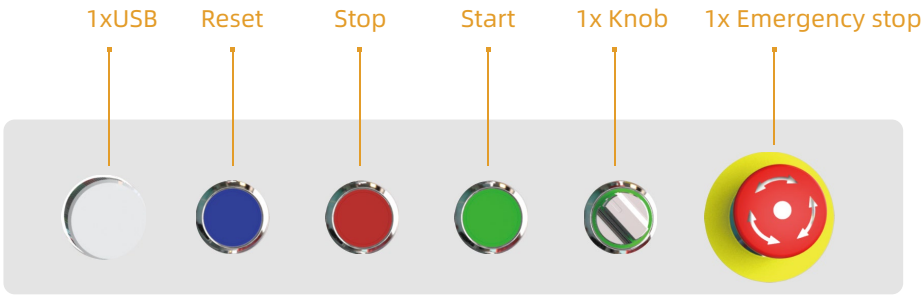

Note:The figure above shows the number of standard buttons
The number and brand of buttons can be customized

Ordering Information

Part Number	Description
IPC57190-6405K-4G-128G	19″ TFT LCD / Non-touch screen / extend 5 buttons / DC9~36V input / Resolution 1280x1024 / J6412 / 4G RAM / 128G / mSATA / 2xLAN / 4xUSB / 1xHDMI
IPC58190-6405K-4G-128G	19″ TFT LCD / Capacitive touch screen / extend 5 buttons / DC9~36V input / Resolution 1280x1024 / J6412 / 4G RAM / 128G / mSATA / 2xLAN / 4xUSB / 1xHDMI
IPC59190-6405K-4G-128G	19″ TFT LCD / Resistive touch screen / extend 5 buttons / DC9~36V input / Resolution 1280x1024 / J6412 / 4G RAM / 128G / mSATA / 2xLAN / 4xUSB / 1xHDMI

Optional Accessories

mSATA	128G / 256G / 512G / 1T
2.5" HDD	512G / 1T / 2T
RAM	4G / 8G / 16G / 32G

Packing List

Terminal	3-pin terminal
Terminal	12-pin terminal
Terminal	24-pin terminal

Note: Package contents are subject to change without prior notice

Powerful. Beautiful.

Excellence · Innovation

IPC50215
IPC51215
IPC52215

*front-screen button: the right side. widescreen button: the lower side

Shanghai Panelmate Electronics Co., Ltd.

21.5" FHD Industrial Arm-Mounted Operation Panel PC

PANELMATE
Creative HMI Solution

IPC50215 & IPC51215 & IPC52215

PANELMATE
Creative HMI Solution

Features

- Display type: 15", 15.6", 18.5", 19", 21.5"
- Front panel/back cover: Aluminium-magnesium alloy
- IP protection level: IP65
- Screen Type: Single point resistive touchscreen,Multi-point capacitive touchscreen,Non-touch screen
- OS: WinXP, Win7, Win10/Win11, WinCE, Linux
- Equipped with 2xIntel i210AT Gigabit network cards, 4xUSB
- Processor: Intel Celeron J6412 (don't support Win XP, Win7) /3855U/3865U and Intel skylake i3/i5/i7 multiple CPU options
- DC 9~36V
- Extendable WIFI/4G

Namely Rule

IPC5XXXX Y L X -xxxK-4G-128G-xxxx

- Industrial PC
- Series code
  - 50/57: Non-touch screen
  - 52/59: Capacitive screen
  - 51/58: Resistance screen
  - 50/51/52: Button located at the bottom side of screen
  - 57/58/59: Button loacted at the right side of screen
- Display size
- Y:optional round tube mounted(retangular tube mounted)
- L:bottom support arm mounted(Support arm mounted)
- Angle of view (standard: 0 °)
- CPU model
  - 64: Intel Celeron J6412
  - 38: Intel Celeron 3855U/3865U
  - 71: Intel Skylake i3 6100U/7100U
  - 72: Intel Skylake i5 6200U/7200U
  - 75: Intel Skylake i7 6500U/7500U
- Numbers of extension buttons(00K)
- Memory capacity
- HDD capacity
- Customized code (blank)

Specifications

Model		IPC50215&IPC51215&IPC52215				
Processor	CPU	Intel®Celeron® processor J6412	Intel®Celeron® processor 3855U/3865	Intel®Core™i3 processor	Intel®Core™i5 processor	Intel®Core™i7 processor
	Frequency	Quad Core 2.0GHZ	Dual Core 1.6GHZ	Dual Core 2.3GHZ	Dual Core 2.8GHZ	Dual Core 3.1GHZ
	Cache	1.5MB	2MB	3MB	3MB	4MB
	Memory	DDR4 3200MT/s Max: 32GB	DDR4-1866/2133 Max: 32GB	DDR4-2133 Max: 32GB	DDR4-2133 Max: 32GB	DDR4-2133 Max: 32GB
	Storage	1x2.5" SATA 3.0 +1 x mSATA				
I/O	Network (LAN)	2xIntel i210 1000Mbps RJ45 with surge protection				
	Audio	Realtek ALC662VD audio controller,support 5.1 channels				
	USB	4xUSB3.0				
	COM	2xRS232/RS485 with surge protection, RS485 support automatic flow control				
	Expansion Slot	1xMin-Pcle X1, Support 4G LTE/WIFI/BT with Sim card slot				
	Rear I/O	1xHDMI/2xGLAN/4xUSB/2xCOM/AUDIO/DC IN/Power Switch				
Power	Input Voltage	DC 9~36V				
	Power	45W				
Physical	Display Port	HDMI				
	Dimension (WxHxD)	(Keyboard bay not included) 533.1mm x 416.7mm x 130mm (20.99" x 16.41" x 5.12")				
	Net Weight(kg)	(Keyboard bay not included) 14.05kg				
	Mounted	4460 or 48 arm-mounted				
LCD	Display Type	21.5" FHD TFT				
	Resolution	1920x1080				
	Colors	16.7M				
	Active Area (WxH/mm)	476.64mmx268.11mm (18.77"x10.56")				
	Backlight	LED				
	MTBF (hour)	30000hrs				
	Pixel Pitch (HxV)	0.24825x0.24825				
	Luminance(cd/m2)	250cd/m2				
	Contrast Ratio	3000:1				
	Viewing Angle	(L) 89/ (R) 89/ (U) 89/ (D) 89				
Touchscreen	Touch Type	Single point resistive touchscreen & Multi-point capacitive touchscreen & Non-touch screen				
	Light Transmission	>85%				
	Controller	USB interface				
	Driver Support	Windows7, WSE7, Windows 10, Vxworks, Linux				
	Multi-touch	10 points (Windows)				
	Surface Hardness	Resistive touchscreen: Mohs' Number> = 3H; Capacitive touchscreen: Mohs' Number 7H				
Environment	Operating Temperature	0~50℃				
	Storage Temperature	-20~60℃				
	Relative Humidity	5~95% (Non condensation)				
	Shock	Operating 10G peak acceleration(11 ms duration), follow IEC 60068-2-27				
	Vibration	Operating Random Vibration Test 5~500Hz, 1Grms@with HDD;2Grms@with SSD, follow IEC 60068-2-64				
	EMC	CE/FCC Class A				
	Front Panel Protection	IP65				

All product specifications are subject to change without notice.

Last updated:July-2023

Technical Drawings unit: mm

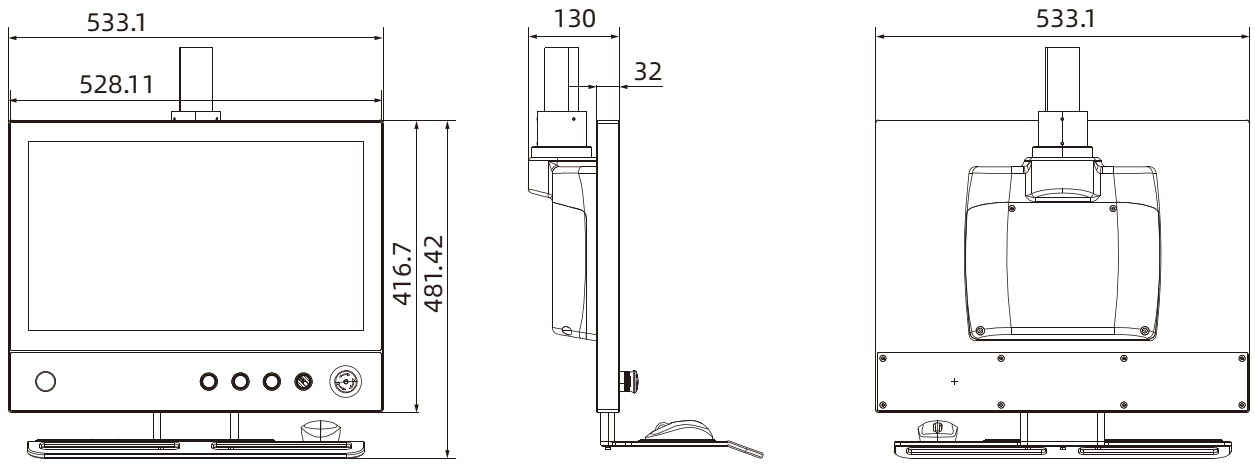

External I/O View

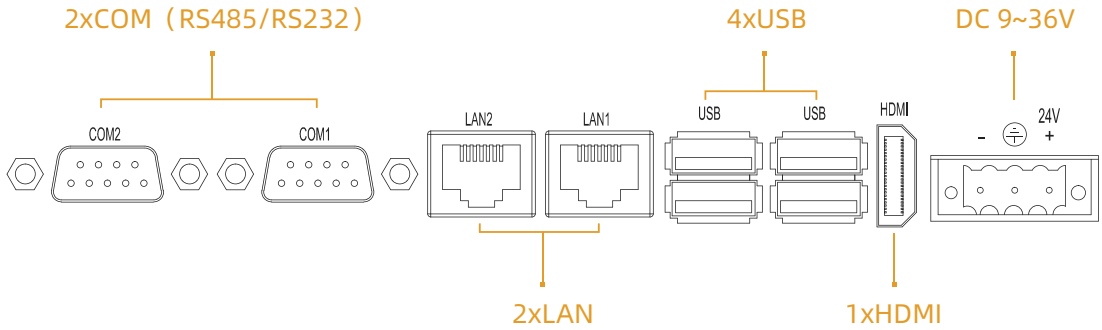

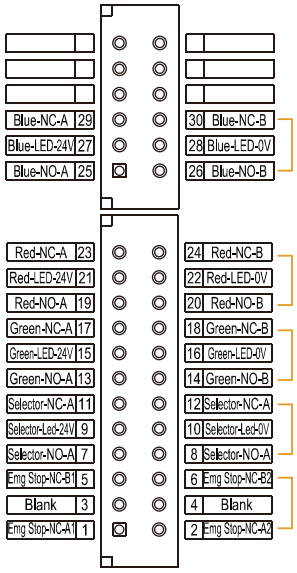

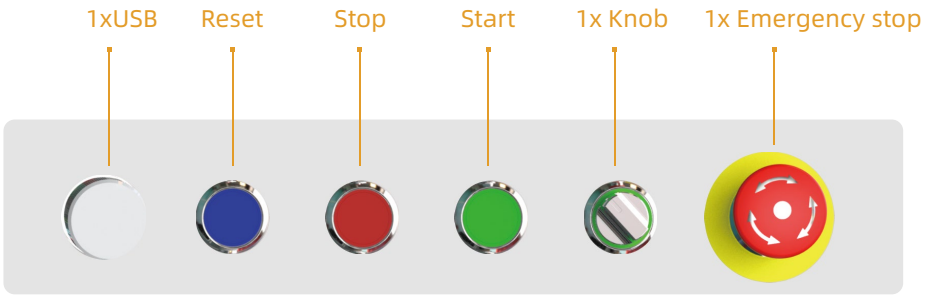

Note:The figure above shows the number of standard buttons
The number and brand of buttons can be customized

Ordering Information

Part Number	Description
IPC50215-6405K-4G-128G	21.5” TFT LCD / Non-touch screen / extend 5 buttons / DC9~36V input / Resolution 1920x1080/ J6412 / 4G RAM / 128G / mSATA / 2xLAN / 4xUSB / 1xHDMI
IPC51215-6405K-4G-128G	21.5” TFT LCD / Capacitive touch screen / extend 5 buttons / DC9~36V input / Resolution 1920x1080/ J6412 / 4G RAM / 128G / mSATA / 2xLAN / 4xUSB / 1xHDMI
IPC52215-6405K-4G-128G	21.5” TFT LCD / Resistive touch screen / extend 5 buttons / DC9~36V input / Resolution 1920x1080 / J6412 / 4G RAM / 128G / mSATA / 2xLAN / 4xUSB / 1xHDMI

Optional Accessories

mSATA	128G / 256G / 512G / 1T
2.5" HDD	512G / 1T / 2T
RAM	4G / 8G / 16G / 32G

Packing List

Terminal	3-pin terminal
Terminal	12-pin terminal
Terminal	24-pin terminal

Note: Package contents are subject to change without prior notice